ATM-LEVAGE

Location de grues & mini grues

MPK 10.2

atmlevage@groupeatm.com

www.atmlevage.com

06 03 00 44 76

OVERALL DIMENSIONS

OUTDOOR WHEELS

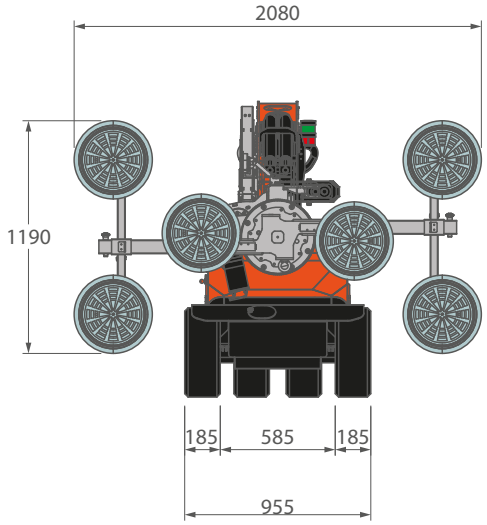

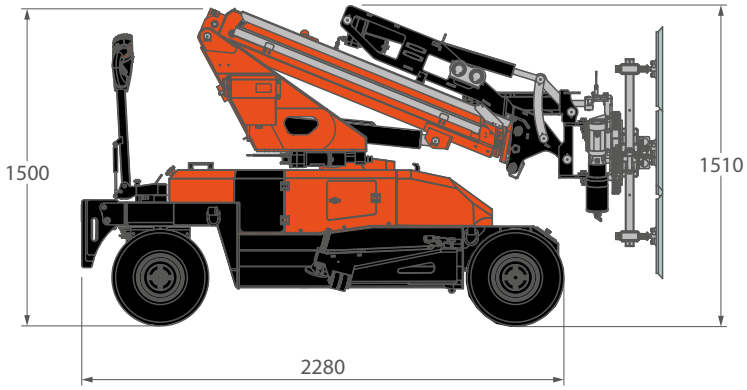

TWIN WHEELS

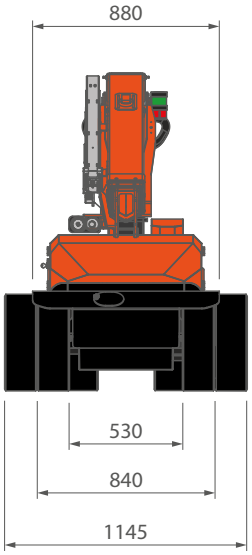

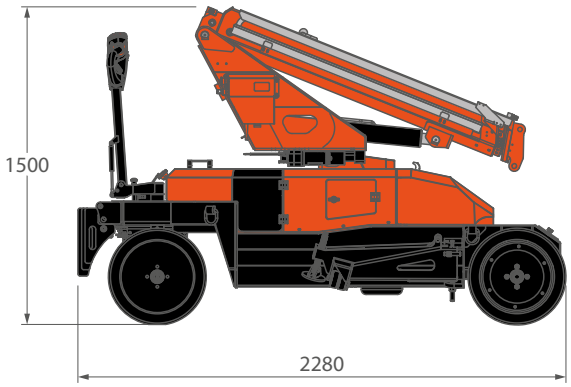

OUTRIGGERS

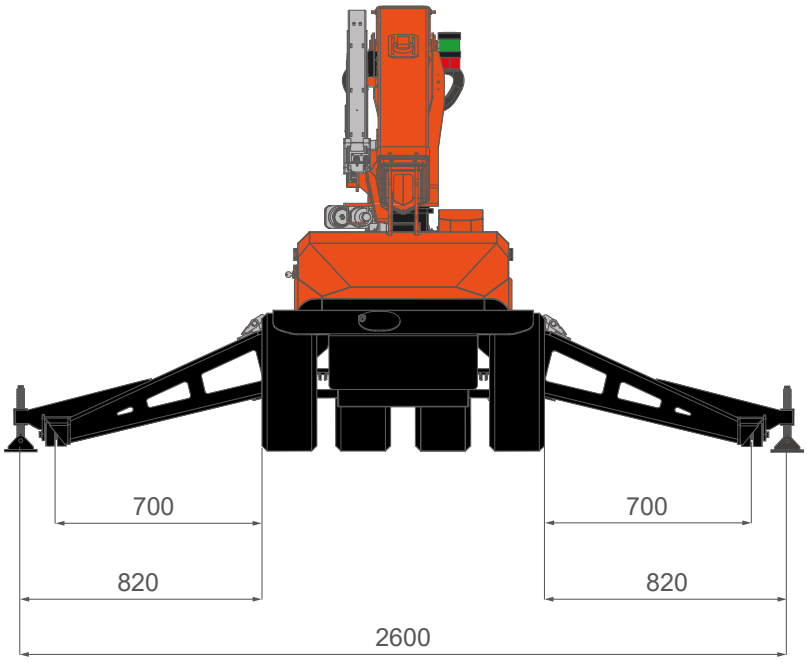

BOOM SWING

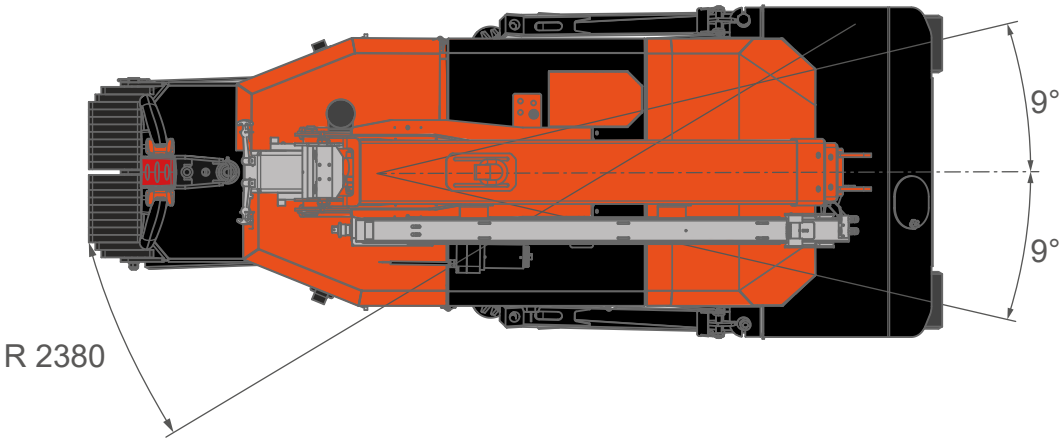

ATM-LEVAGE
Location de grues & mini grues

OVERALL INFORMATIONS

		DESCRIPTION		U.M	VALUE
CRANE INFO	OVERALL DIMENSIONS	Height		mm	1.500
		Length			2.280
		Width			955
	BOOM	Length		m	1,57 - 3,5
		Speed		s	48
	SLEWING	Angle		°	-9°/+9°
		Speed		s	7
	LIFTING	Working Angle		°	-21°/58°
		Speed		s	42
	MAX CAPACITY			kg	990
	REAR WHEEL MAX LOAD			kg	410 [1]
	FRONT WHEEL MAX LOAD	Turret positioned at 0°			980 [2]
		Turret slewed by 9°			1.320 [2]
	TRAVEL SPEED			km/h	4
	GRADEABILITY			°	13° (23%) [3]
	WORKING TEMPERATURE			°C	-20°/+40°
	Lifting Class (UNI 4301-1)			A1	

WEIGHTS	CRANE	MPK10.2 (no counterweights)		kg	1.045 [4]
	COUNTERWEIGHT	CW1 (into frame)		kg	100
		CW2 (into hood)			130
	TOTAL	MPK10.2		kg	1.275

ACCESSORIES	JIB	JIB-MPK10		kg	18
	JVM MANIPULATOR	JVM10.2 (standard configuration)		kg	179

ENGINE	ELECTRIC	Battery Voltage		V	24
		Power		kW	2,2

[1]: Without load
[2]: With load
[3]: Max value only for short distance and a maximum of 30 seconds. Forward movement at maximum gradeability is intended with extended boom and without load.
[4]: Dry weight

MAIN BOOM

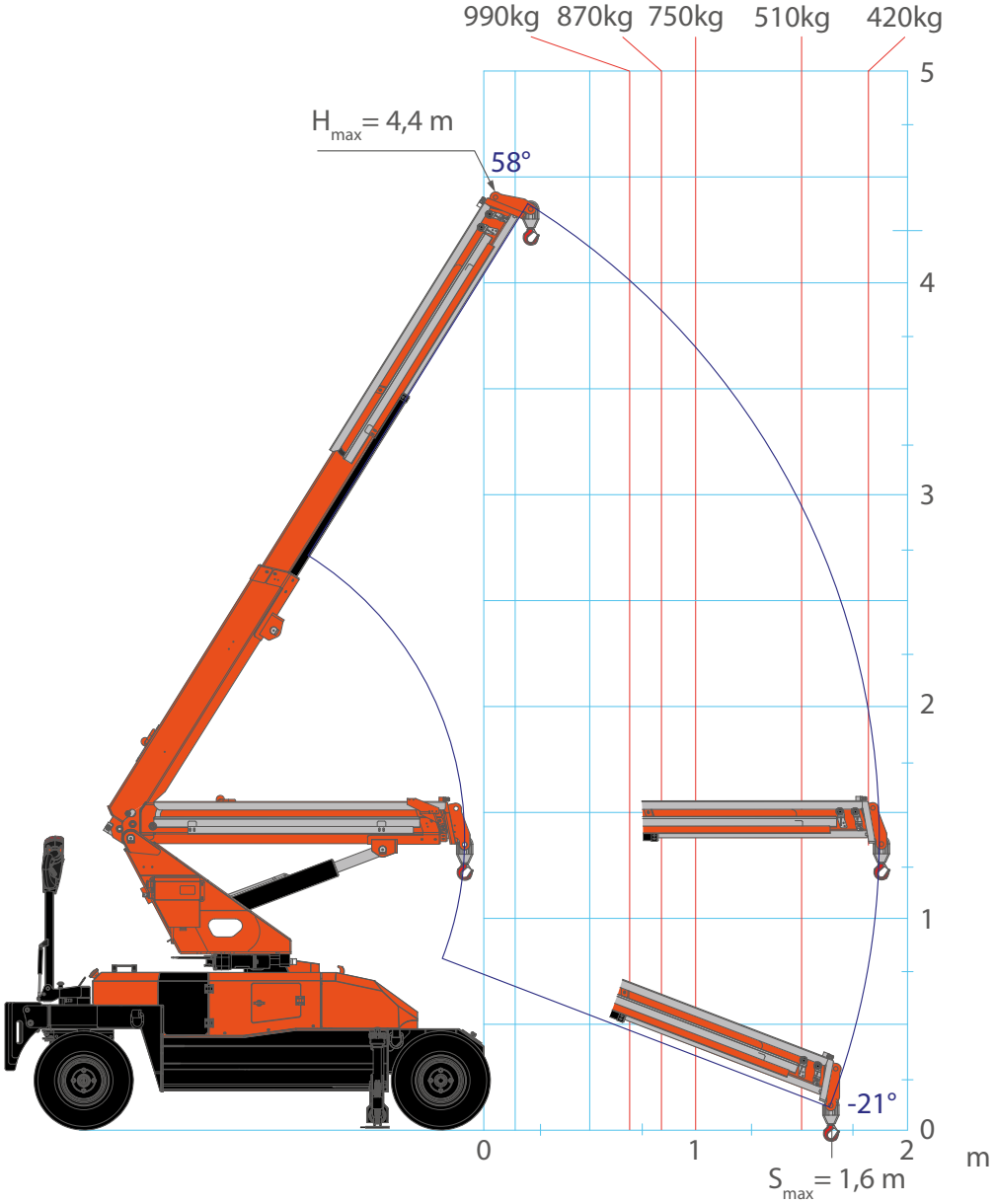
990kg
870kg
750kg
510kg
420kg
H_{max} = 4,4 m
58°
-21°
S_{max} = 1,6 m
0
1
2
3
4
5
m

JIB MPK10

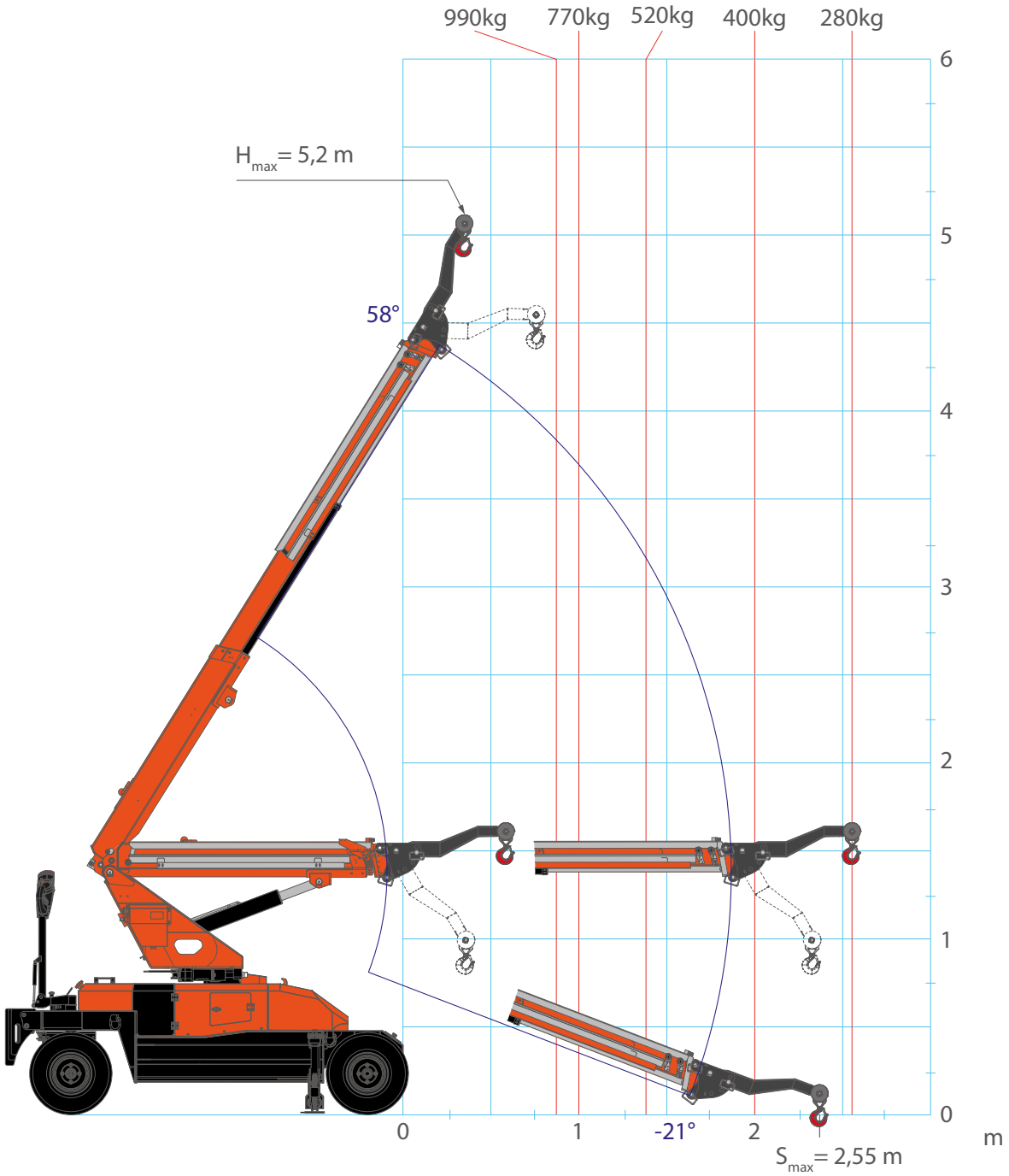
990kg
770kg
520kg
400kg
280kg
H_{max} = 5,2 m
58°
-21°
S_{max} = 2,55 m
0
1
2
3
4
5
6
m

JVM10.2

GLASS standard configuration (6 vacuum pads Ø400)

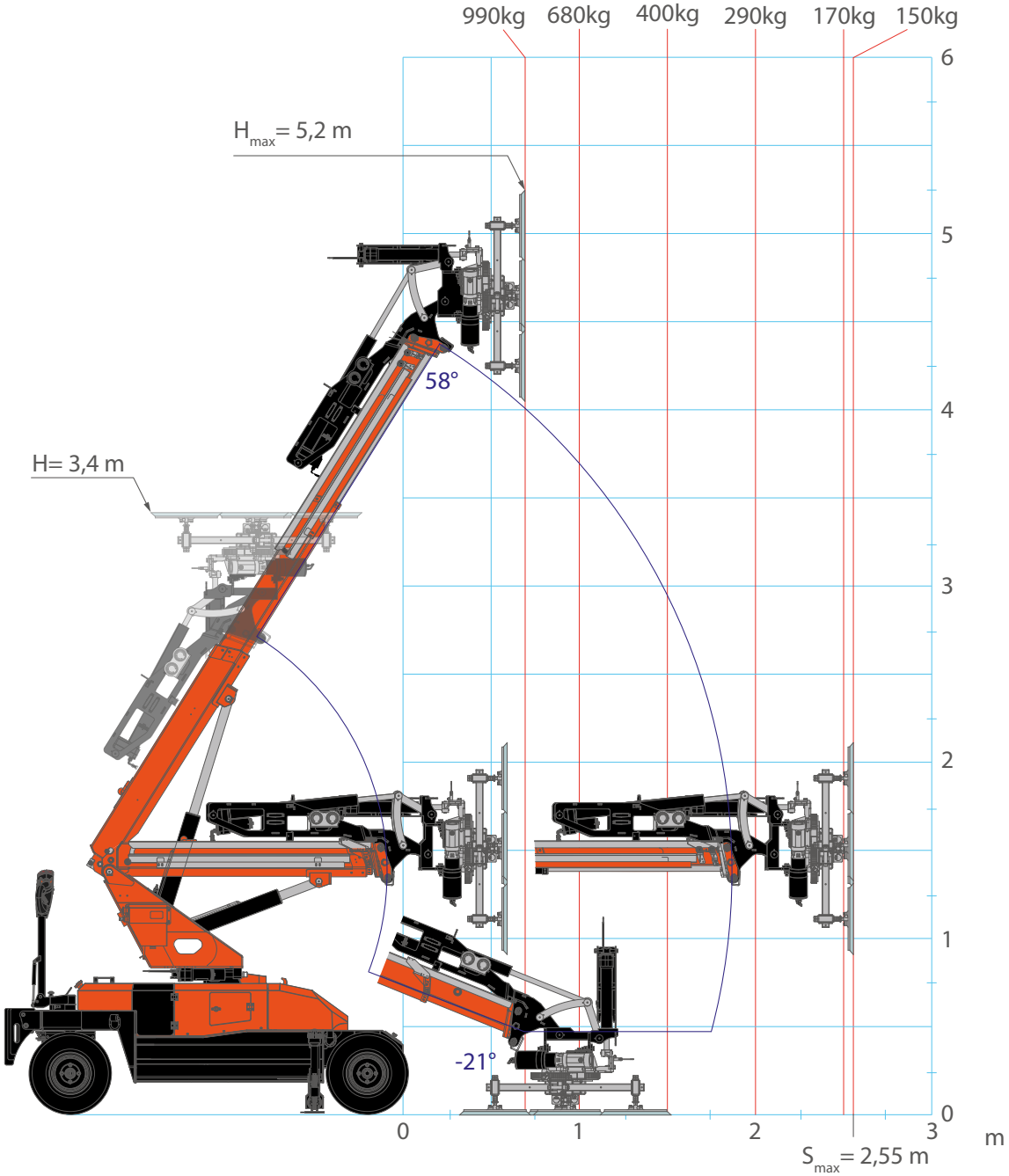

JVM10.2

JIB-JVM06-10 configuration

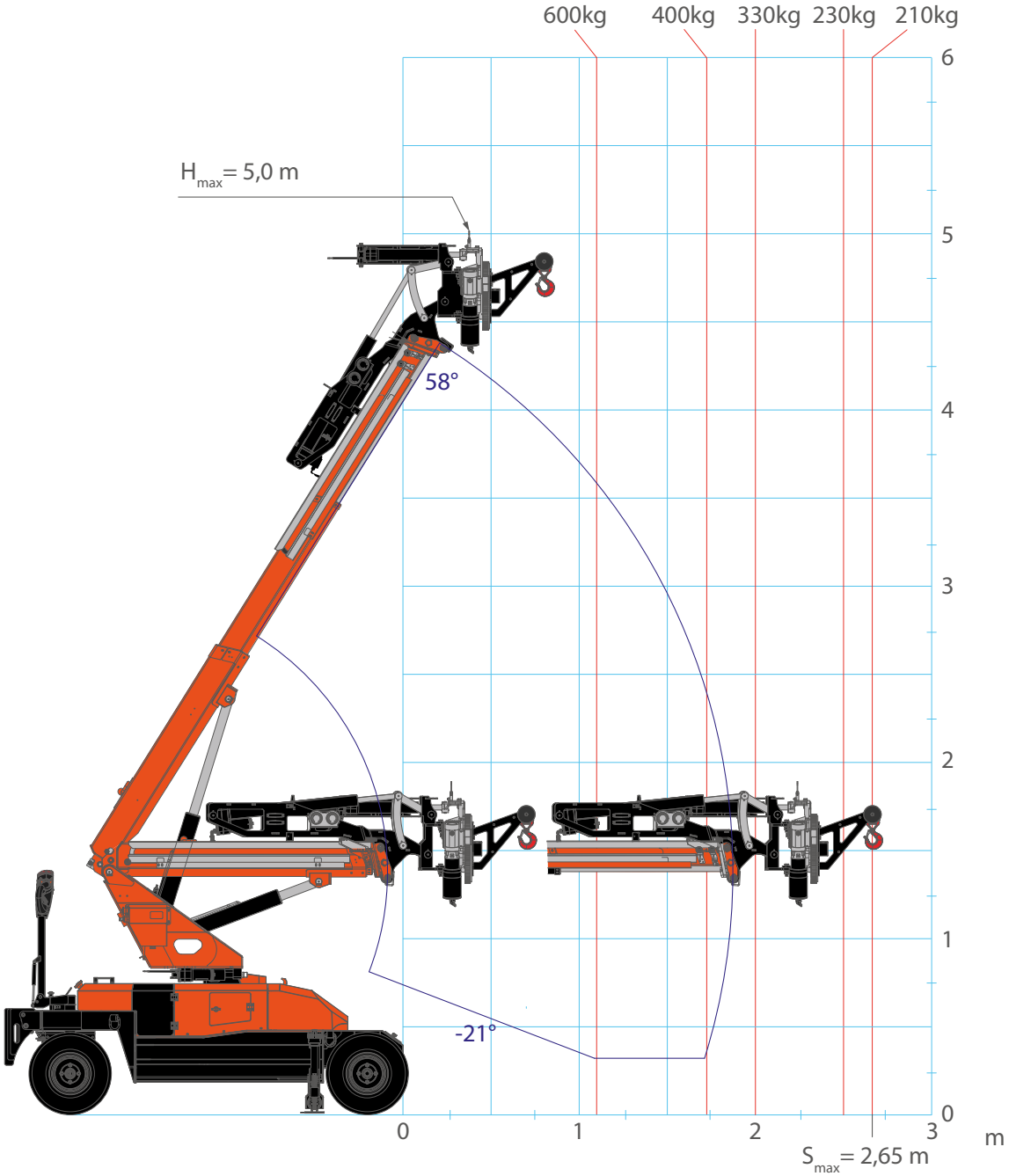

ACCESSORIES FEATURES

JIB MPK10

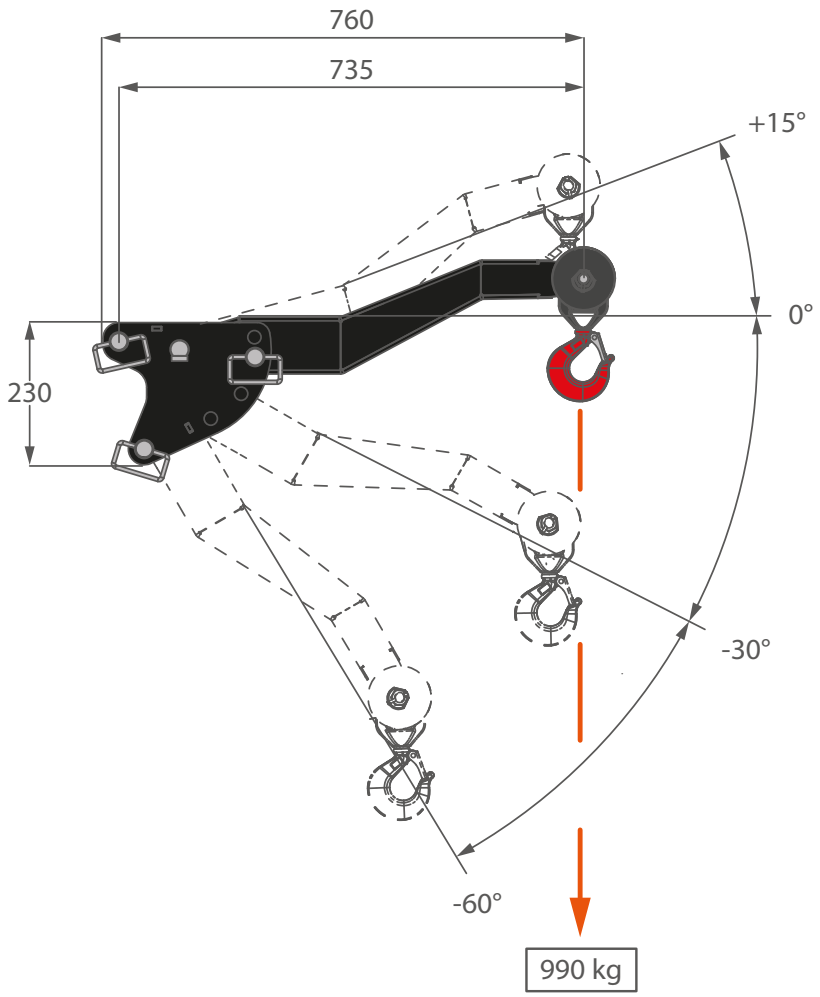

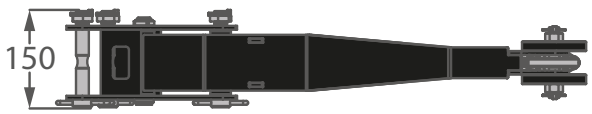

	JIB	JIB-MPK10	kg	18

JVM10.2

GLASS standard configuration (6 vacuum pads Ø400)

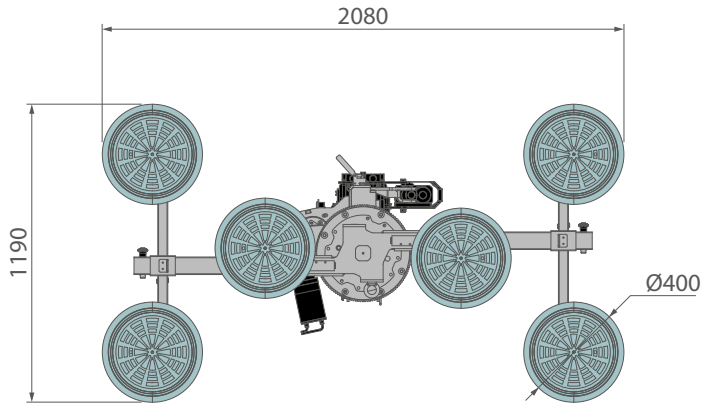

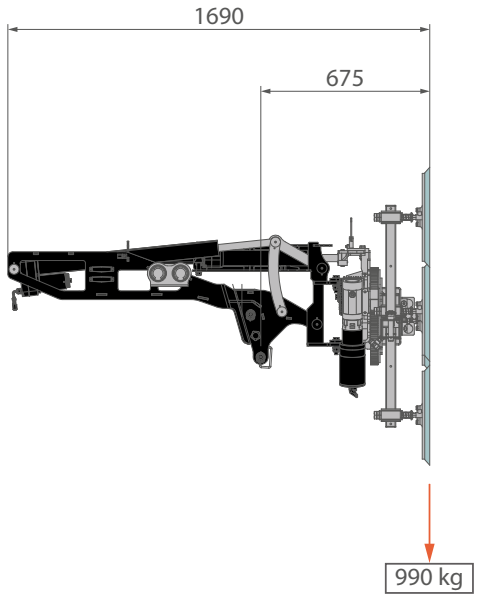

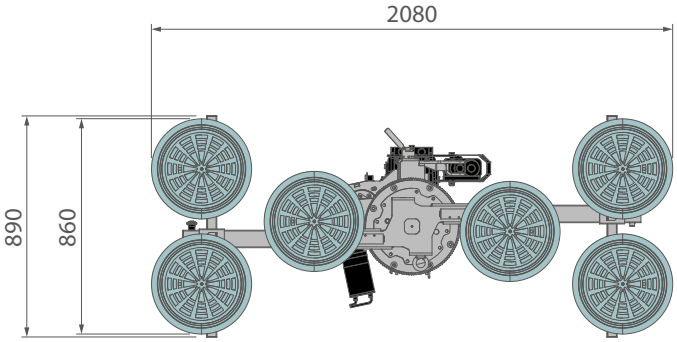

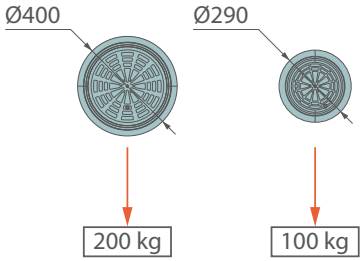

	JVM	JVM10.2 (standard configuration)	kg	179

ACCESSORIES	Central pads support	kg	1
	Vertical pads support	kg	3,4
	Ø400 vacuum pad (x1)		4,8

OPTIONAL	Lateral pads extension	kg	4,4
	Ø290 vacuum pad (x1)		3,2

JVM10.2

MONOPANEL configuration (4 pads)

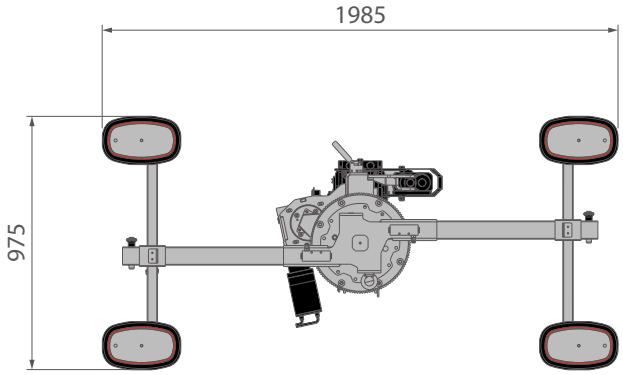

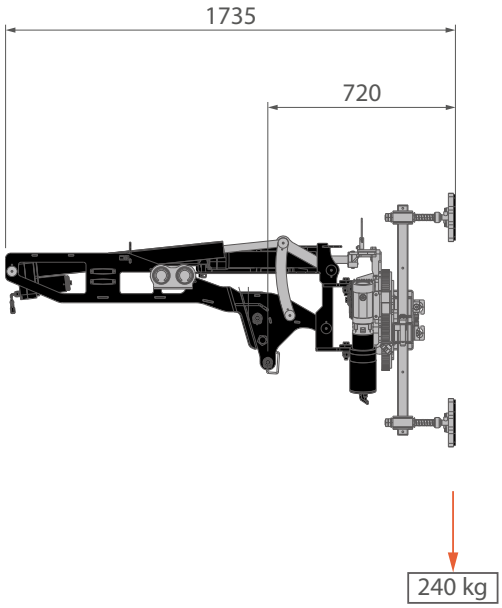

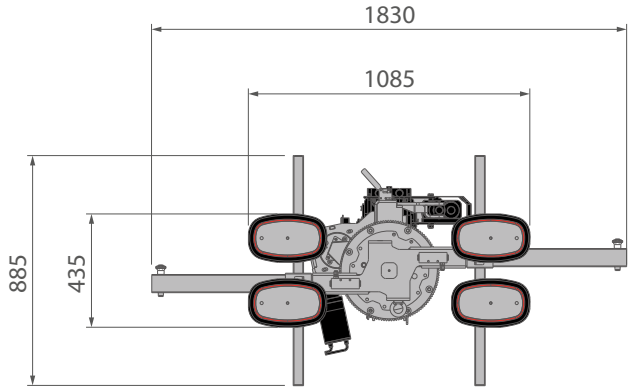

	JVM	JVM10.2 (monopanel configuration)	kg	157

JVM10.2

JIB-JVM06-10 configuration

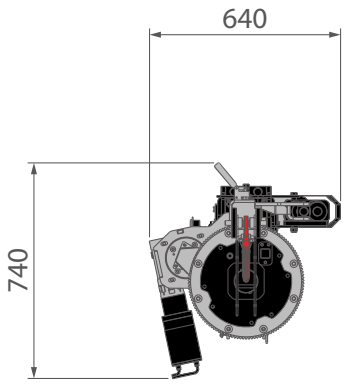

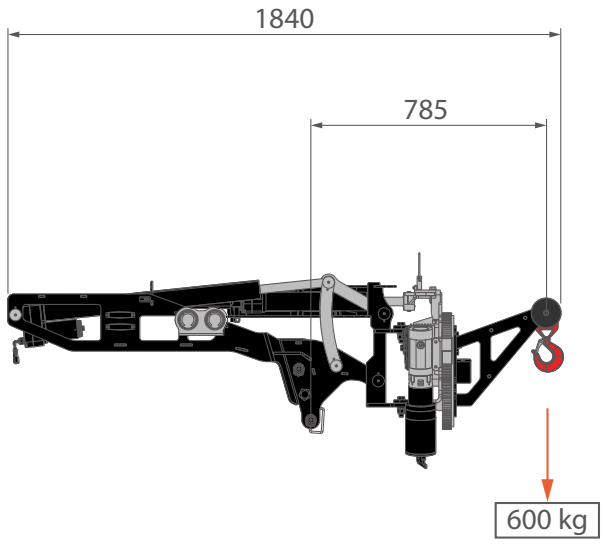

	JVM	JVM10.2 (JIB-JVM06-10 configuration)	kg	131

JVM10.2

TILT

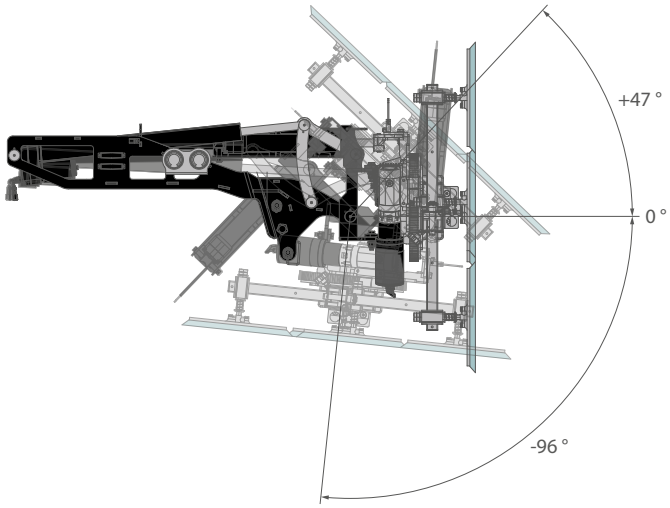

SWING

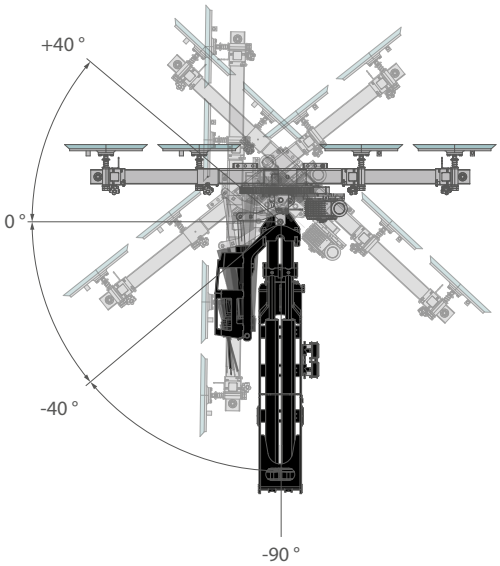

CONFIGURATION 1

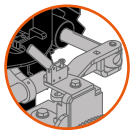

CONFIGURATION 2

	ANGLE		
CONFIGURATION		min	max
	1	-40°	+40°
	2	-90°	-40°

SYMBOLS

- Minipicker
- Electric Engine
- Boom Angle
- Weight
- Travel Speed
- Maximum Capacity
- Boom Lenght
- Rear Wheel Max Load
- Gradeability
- Slewing
- Jib
- Front Wheel Max Load
- JVM Manipulator
- Working Temperature

REMARKS REFERRING TO LOAD CHART

- Load tables have been calculated following the EN 13000:2014 standard.
- Load tables have been calculated considering a wind load of 13,8 m/s, a sail area of 1m2/t and a drag coefficient of 1,2.
- Load capacities are given in kg.
- Hookblocks and hooks weight is part of the load, hence it shall be deducted from the capacity values.
- The working radius is measured form the front plate of the frame.
- The supplied Technical Data is part of the Use & Maintenance Manual.
- Features and specifications may change without prior advice.
- All indicated data are for informational purposes only and are not binding as the crane performs differently depending on its use.